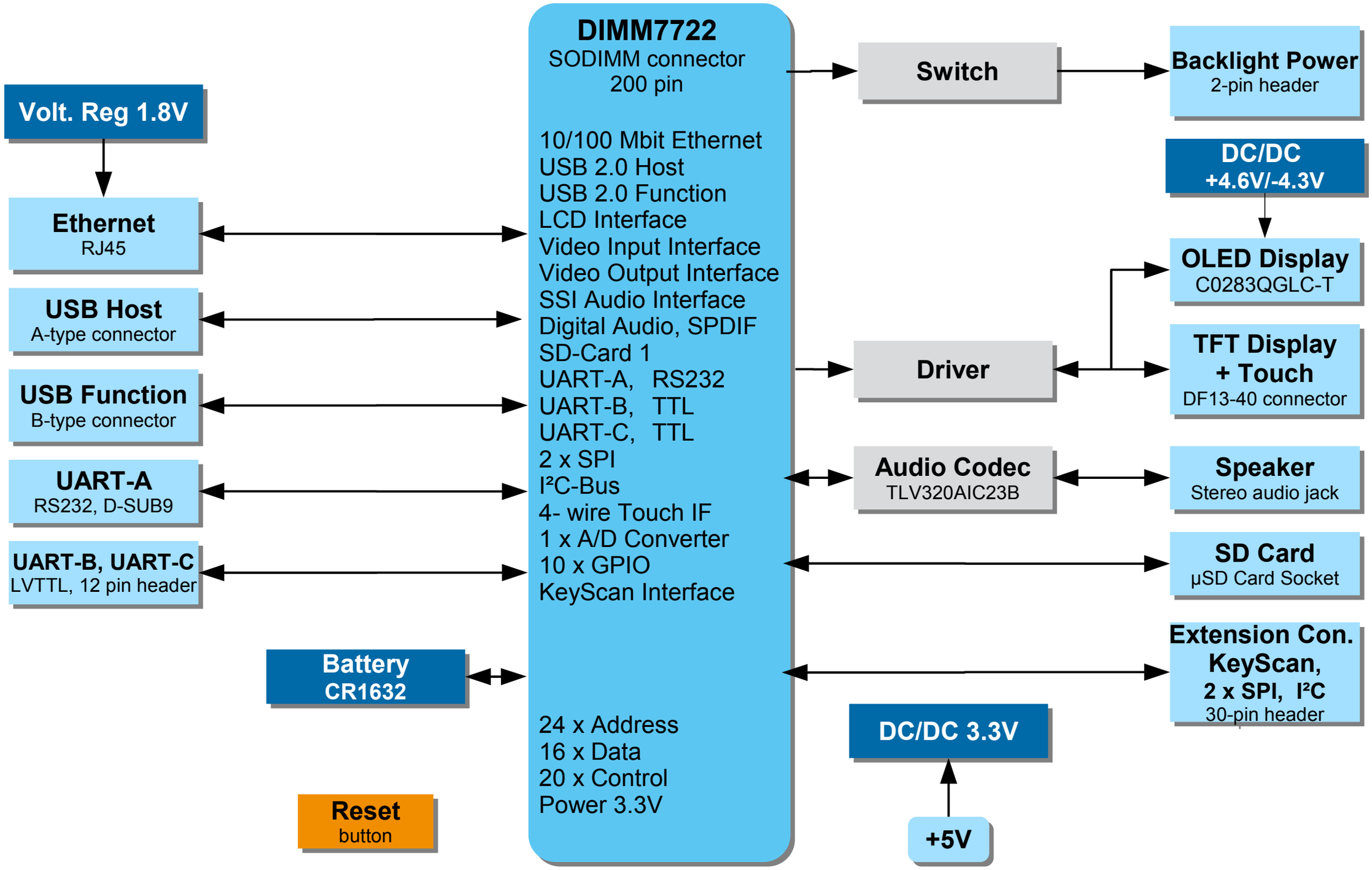
DIMM7722
SODIMM connector
200 pin
10/100 Mbit Ethernet
USB 2.0 Host
USB 2.0 Function
LCD Interface
Video Input Interface
Video Output Interface
SSI Audio Interface
Digital Audio, SPDIF
SD-Card 1
UART-A, RS232
UART-B, TTL
UART-C, TTL
2 x SPI
I²C-Bus
4- wire Touch IF
1 x A/D Converter
10 x GPIO
KeyScan Interface
24 x Address
16 x Data
20 x Control
Power 3.3V
Volt. Reg 1.8V
Ethernet
RJ45
USB Host
A-type connector
USB Function
B-type connector
UART-A
RS232, D-SUB9
UART-B, UART-C
LVTTL, 12 pin header
Battery
CR1632
Reset
button
Switch
Backlight Power
2-pin header
DC/DC
+4.6V/-4.3V
OLED Display
C0283QGLC-T
Driver
TFT Display
+ Touch
DF13-40 connector
Audio Codec
TLV320AIC23B
Speaker
Stereo audio jack
SD Card
µSD Card Socket
Extension Con.
KeyScan,
2 x SPI, I²C
30-pin header
DC/DC 3.3V
+5V