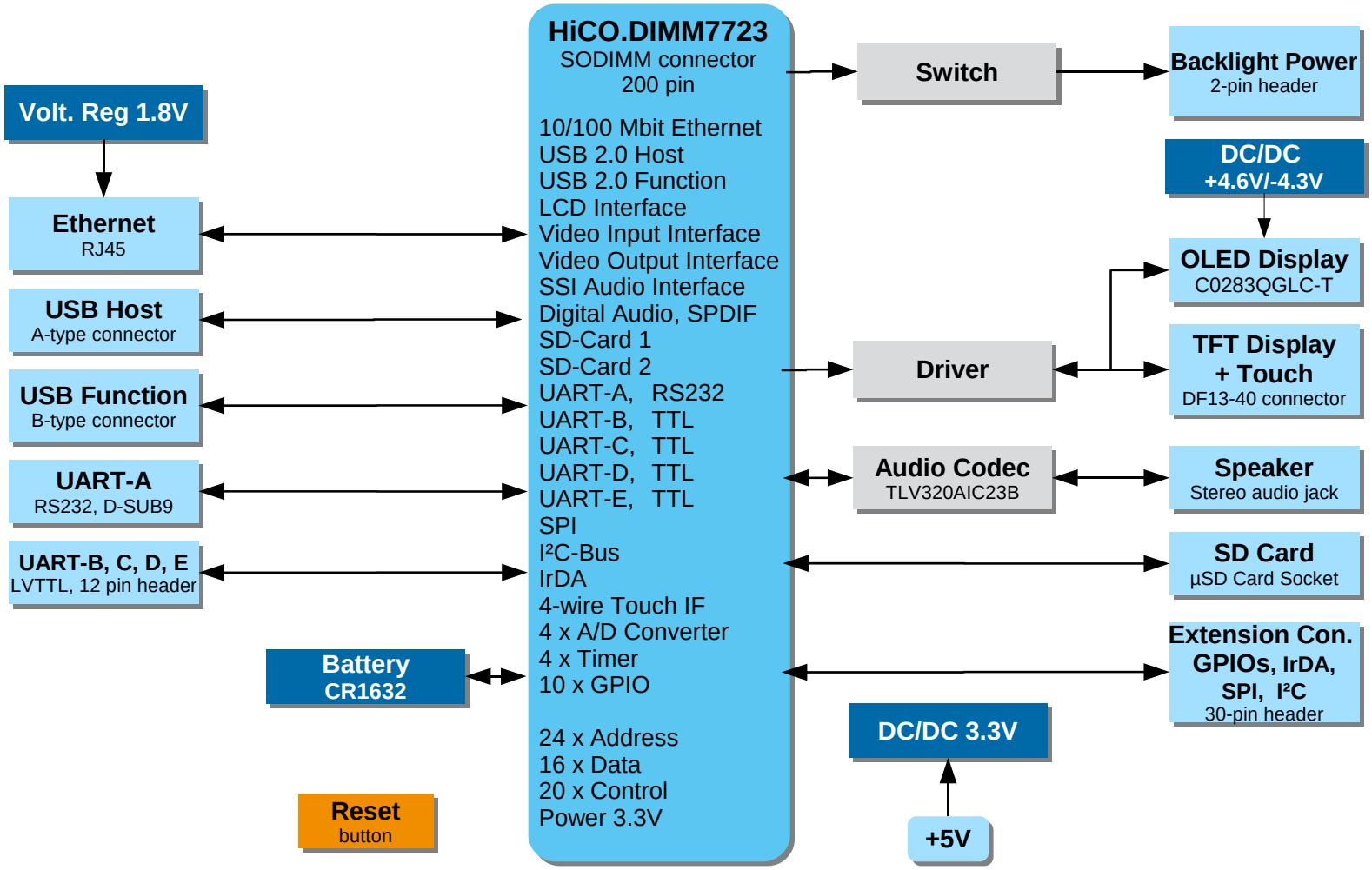
HiCO.DIMM7723
SODIMM connector
200 pin
10/100 Mbit Ethernet
USB 2.0 Host
USB 2.0 Function
LCD Interface
Video Input Interface
Video Output Interface
SSI Audio Interface
Digital Audio, SPDIF
SD-Card 1
SD-Card 2
UART-A, RS232
UART-B, TTL
UART-C, TTL
UART-D, TTL
UART-E, TTL
SPI
I²C-Bus
IrDA
4-wire Touch IF
4 x A/D Converter
4 x Timer
10 x GPIO
24 x Address
16 x Data
20 x Control
Power 3.3V
Volt. Reg 1.8V
Ethernet
RJ45
USB Host
A-type connector
USB Function
B-type connector
UART-A
RS232, D-SUB9
UART-B, C, D, E
LVTTL, 12 pin header
Battery
CR1632
Reset
button
Switch
Backlight Power
2-pin header
DC/DC
+4.6V/-4.3V
OLED Display
C0283QGLC-T
Driver
TFT Display
+ Touch
DF13-40 connector
Audio Codec
TLV320AIC23B
Speaker
Stereo audio jack
SD Card
µSD Card Socket
Extension Con.
GPIOs, IrDA,
SPI, I²C
30-pin header
DC/DC 3.3V
+5V