SBCs & PROCESSOR CORE MODULES

emtrion
embedded systems

DIMM-MX257

Processor module

SODIMM sized also for your embedded multimedia projects

DIMM-MX257
Dimensions: 67.6 x 45 mm

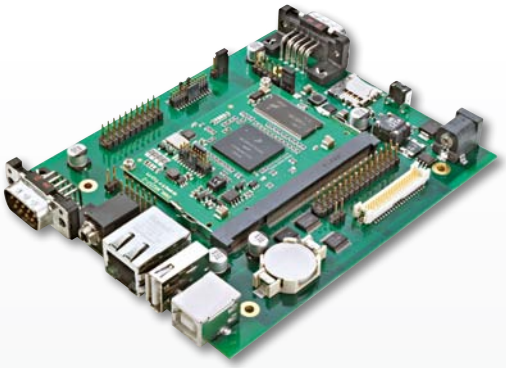

SBC
Dimensions: 100 x 125 mm

Block diagram DIMM-MX257:

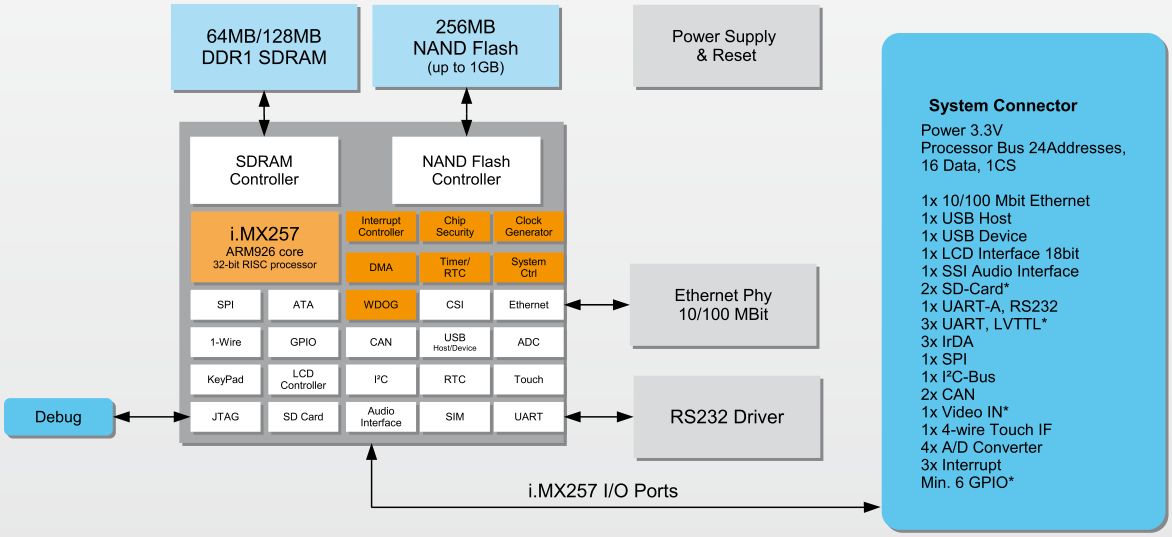

Getting started and reducing your time to market:

Developer and kits:
From emtrion you can buy the hardware as well as software and hardware combined into one of our developer kits.

You can start your application or kernel development easily, and shorten the time to market.

Online updates are available on our support web site.

SBCs & PROCESSOR CORE MODULES

emtrion
embedded systems

DIMM-MX257 as CPU-Module or Single Board Computer

	DIMM-MX257	SBC
Product	DIMM-MX257	DIMM-MX257-SBC
Windows CE	6.0	
Linux	2.6	
QNX	6.4	
Android	on request	
CPU	Freescale	
	i.MX257 (ARM9)	
	400 MHz	
	440 MIPS	
Multimedia	-	
	-	
Coprocessor	-	
Flash	256 MB NAND Flash	
RAM	64 MB / opt. 128 DDR SDRAM	
Ethernet	100Base TX	
UART: RS232/LVTTL/IrDA	1 / 3 / 0	
USB Host	2.0 full speed	
USB Device	2.0 high speed	
Digital Audio	-	
Analog Audio	SSI Interface	
Video In/Camera	8-bit interface for external PAL/NTSC codecs, e.g. for 1 CMOS camera up to 3 MPixel	
Video out	-	
CAN	2 x 2.0 A/B	
I2C	1	
SPI	-	
Digital GPIO	3	
MMC/SDC	2 x MMC/SDC (SDIO)	1 x micro SD
Touch interface	4-wire resistive	
RTC (battery buffered)	yes	1 x battery holdes with CR1632
LCD interface	up to SVGA	
Size in mm	67.6 x 45 x 9	125 x 100
max. power consumption	3.3V@350mA	
Operating temperature	0…70° C, opt. -40…85° C	
Interface to carrier board	Processor bus and I/O via SODIMM connector (200 pos., 2.5V keying)	
Carrier boards available	yes	-
Starterkits available	yes	
Custom specific solutions	yes	

Technische Änderungen vorbehalten.
Stand: 09/2011

freescale™
Alliance Member

emtrion GmbH
Alter Schlachthof 45
D-76131 Karlsruhe
Tel. +49 (0) 721 62725-0
Fax +49 (0) 721 62725-19
E-Mail sales@emtrion.com

Visit us on the Internet:
www.emtrion.com